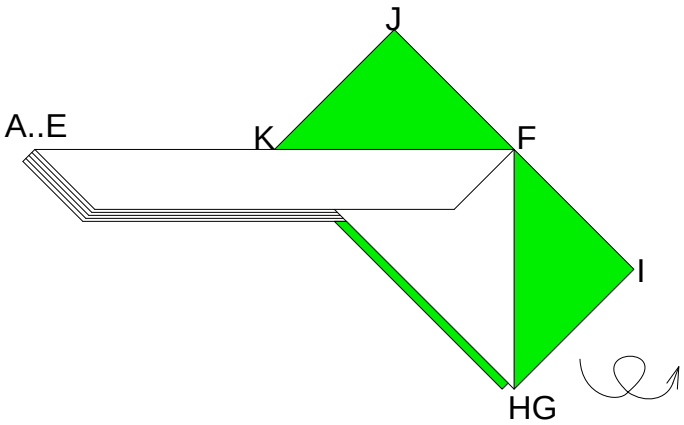

2

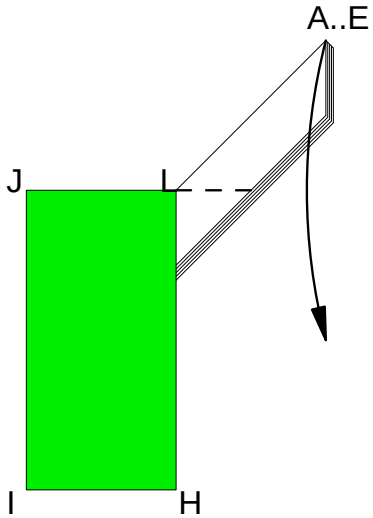

3 Fold one flap down

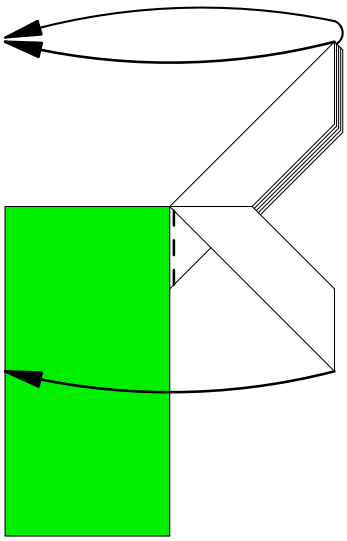

4

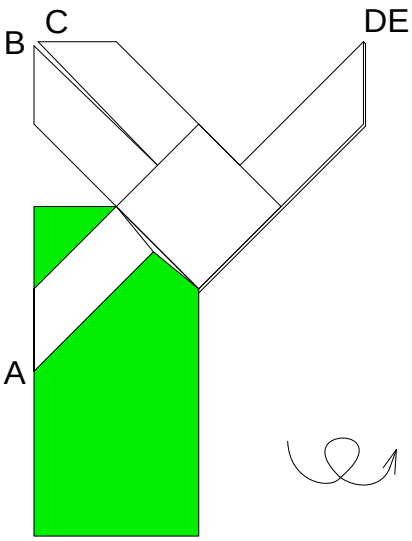

5

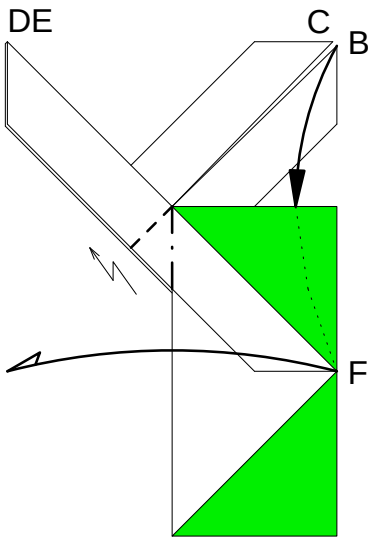

6 Put flap B inside model

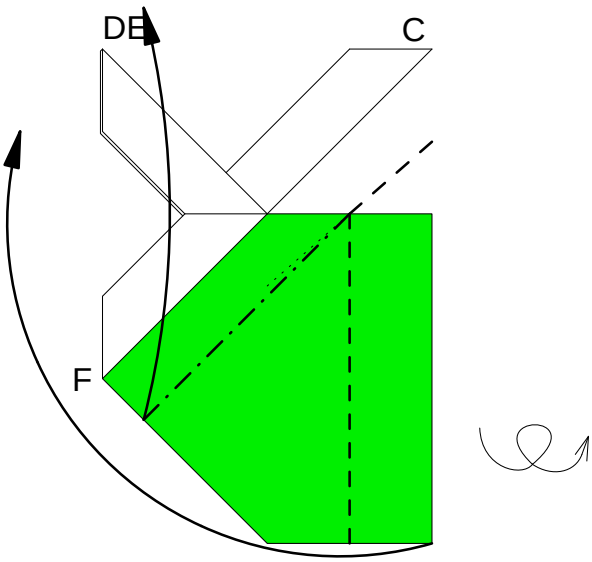

7 Mind the valley fold at the back

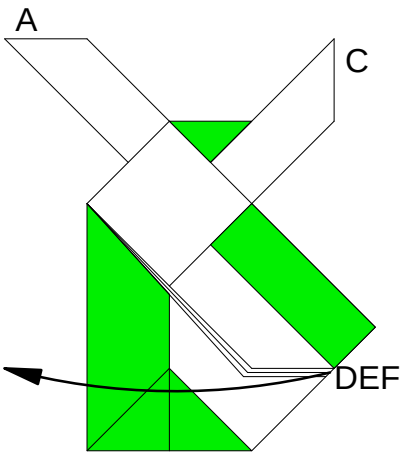

8 Swivel flap E to the left